DOD Envelope Filter 440

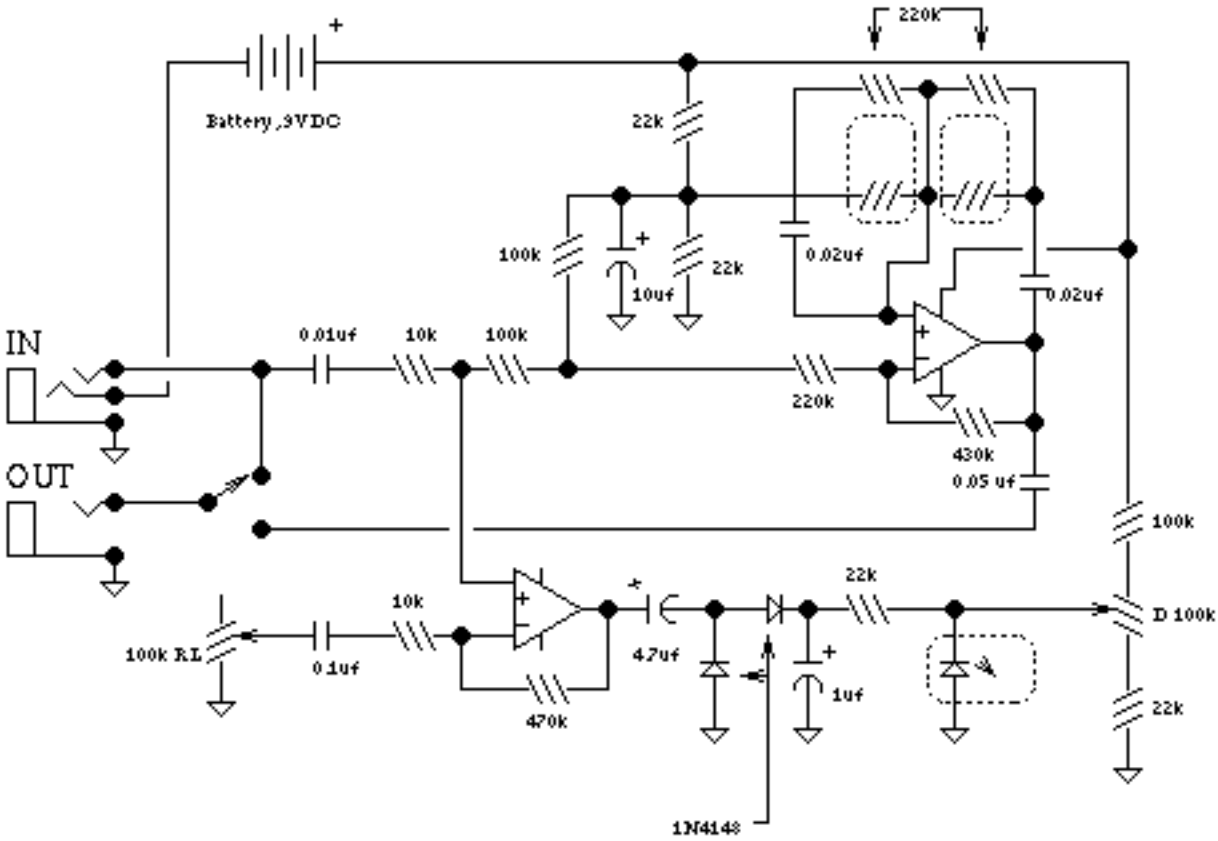

Opamps are each 1/2 of TL022dual low power opamp. LED/LDR module is unknown, but is probably a Vactec VTL module with LED to center-tapped LDR.