Electro Harmonix Soul Preacher

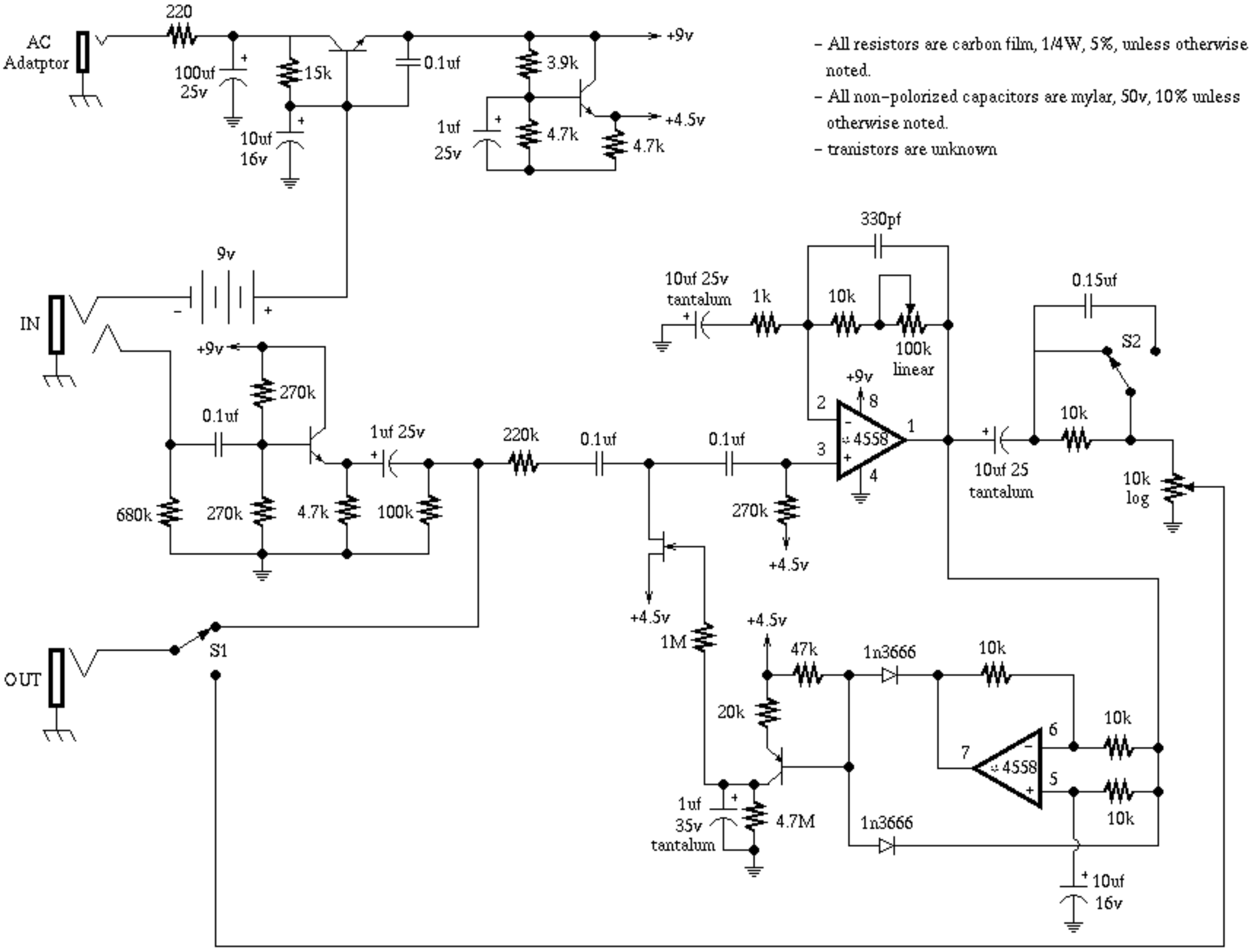

- All resistors are carbon film, 1/4W, 5%, unless otherwise noted.
- All non-polorized capacitors are mylar, 50v, 10% unless otherwise noted.
- tranistors are unknown