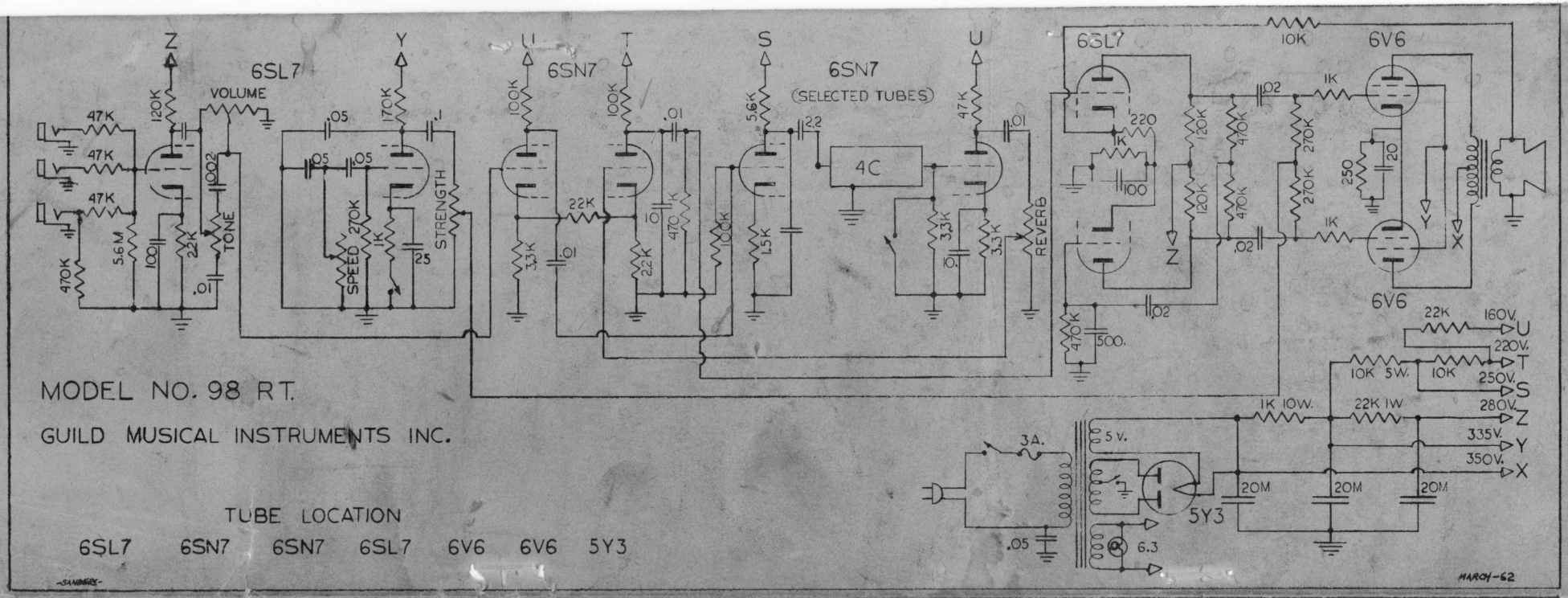
MODEL NO. 98 RT.
GUILD MUSICAL INSTRUMENTS INC.
TUBE LOCATION
6SL7 6SN7 6SN7 6SL7 6V6 6V6 5Y3
6SL7
6SN7
6SN7
(SELECTED TUBES)
4C
6SL7
6V6
6V6
5Y3
VOLUME
TONE
SPEED
STRENGTH
REVERB
3A.
5 V.
6.3
MARCH-62
-SANDERS-

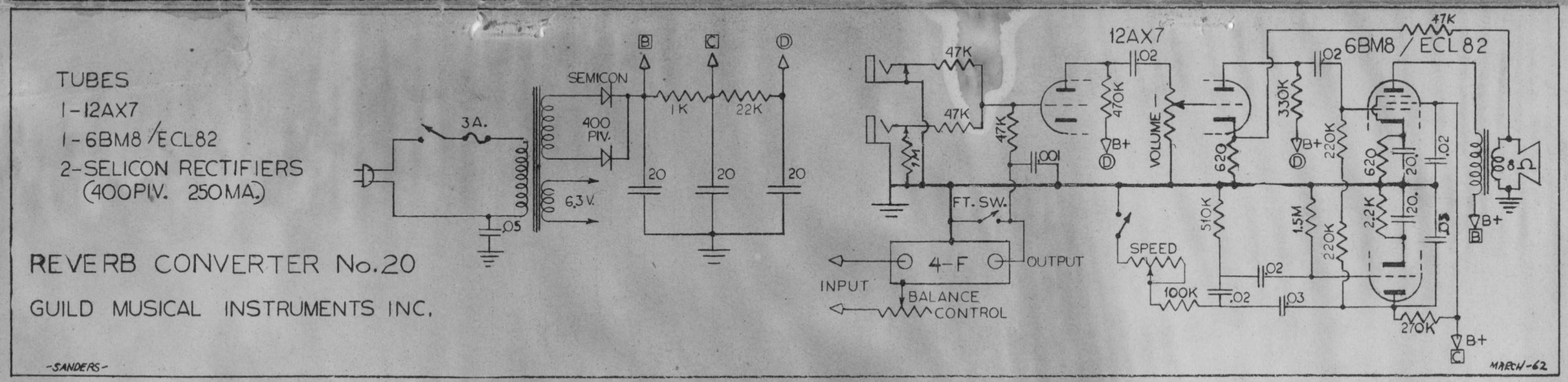
TUBES
1-12AX7
1-6BM8/ECL82
2-SELICON RECTIFIERS
(400PIV. 250MA.)
REVERB CONVERTER No.20
GUILD MUSICAL INSTRUMENTS INC.
SEMICON
400 PIV.
3A.
6.3 V.
12AX7
6BM8/ECL82
VOLUME
FT. SW.
4-F
INPUT
OUTPUT
BALANCE CONTROL
SPEED
B+
MARCH-62
-SANDERS-