PLUSH INC.

MODEL P1060S ROYAL BASS

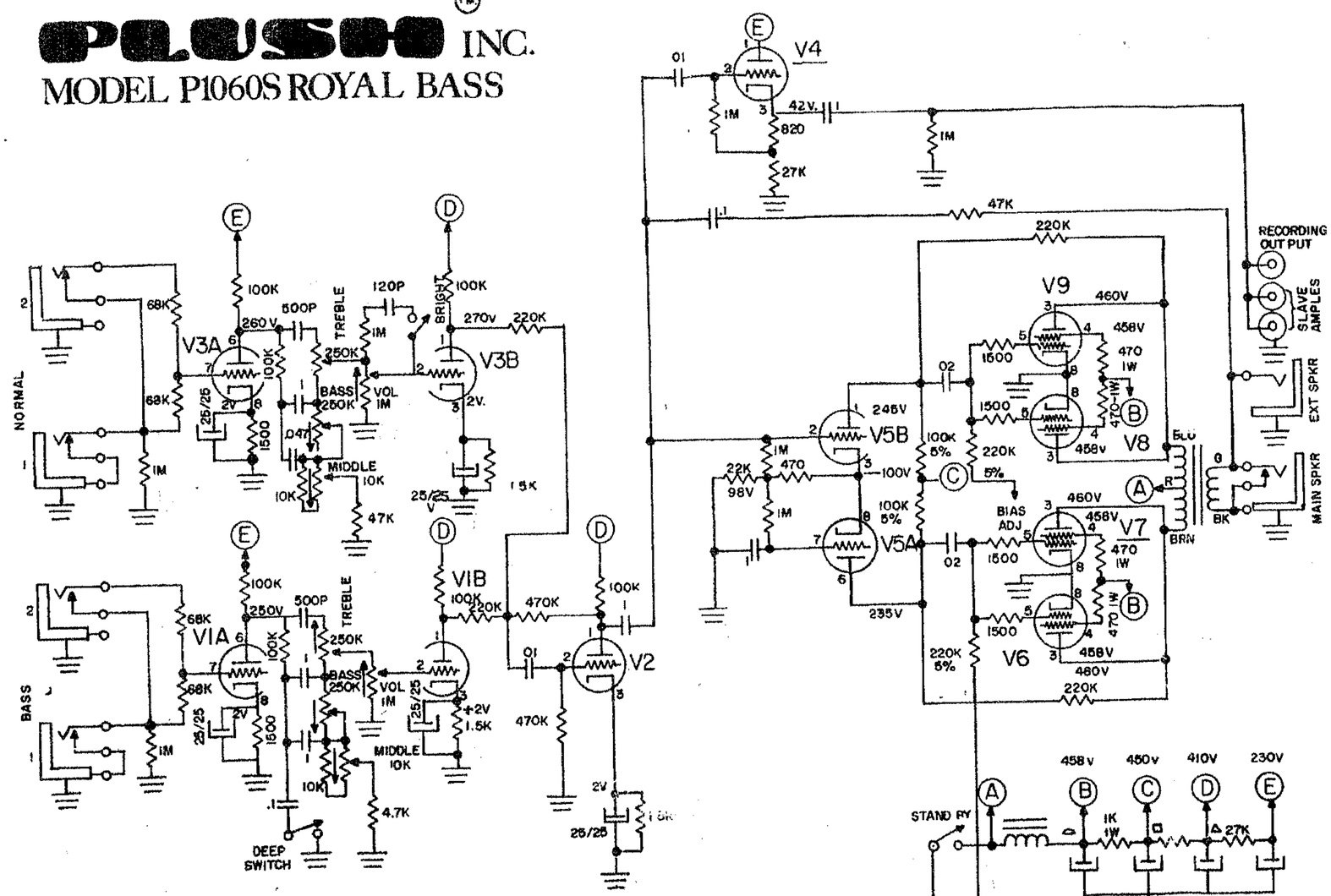

LINE 120V AC
60 CYCLES

NOTES

1. ALL RES 1/2W 10% UNLESS SPEC
2. ALL CAPS 400 VOLTS MIN IN MFDS, UNLESS SPEC (MFDS/VOLTS)
3. —ARROW AT CONTROLS DENOTES CW DIRECTION

V1,2,3	7025
V4,	12AX7
V5,	12AT7
V6,7,8,9,	6L6GC

PLUSH

THE PLUSH SOUND, INCORPORATED • NEW YORK, N Y