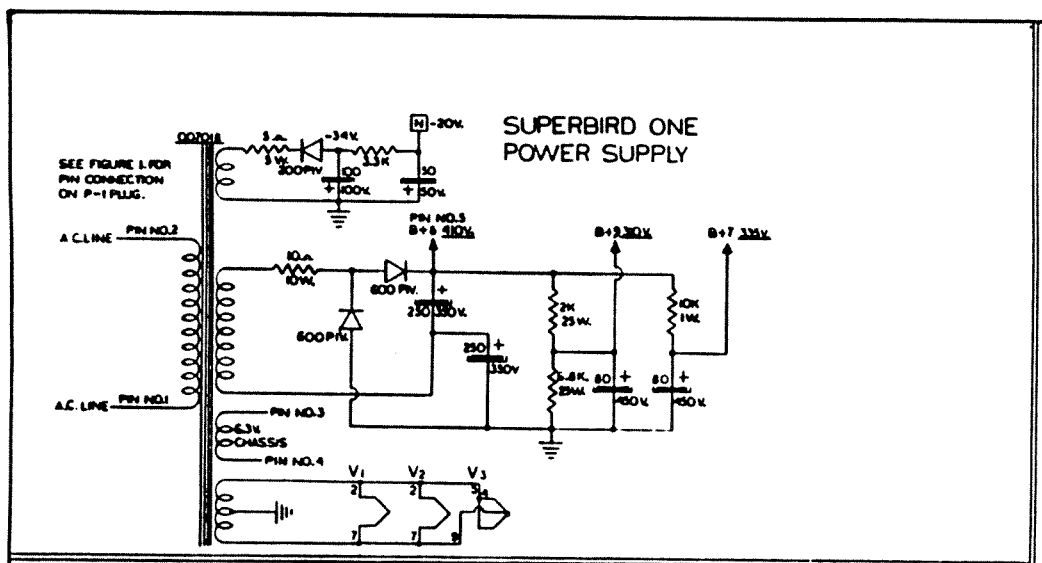

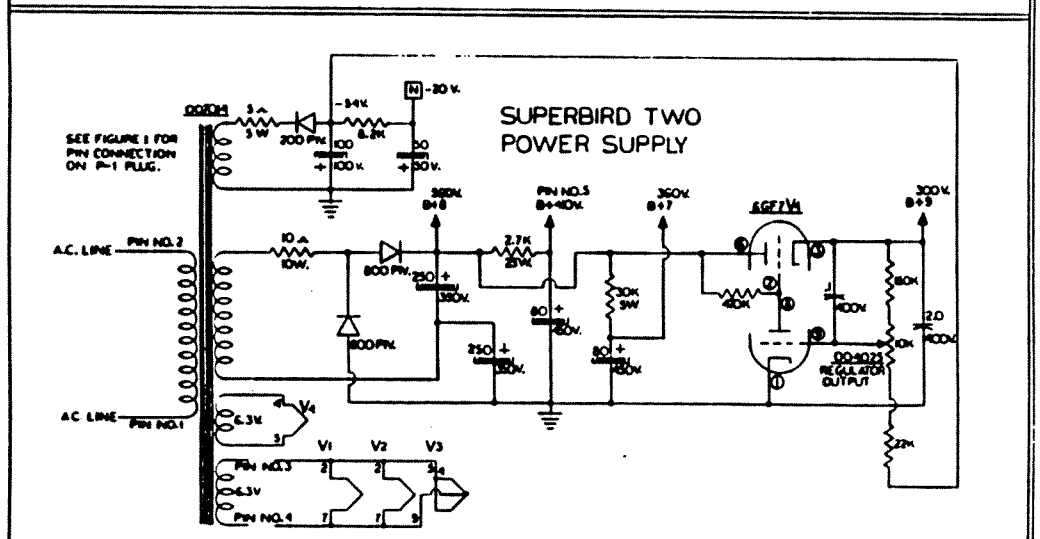

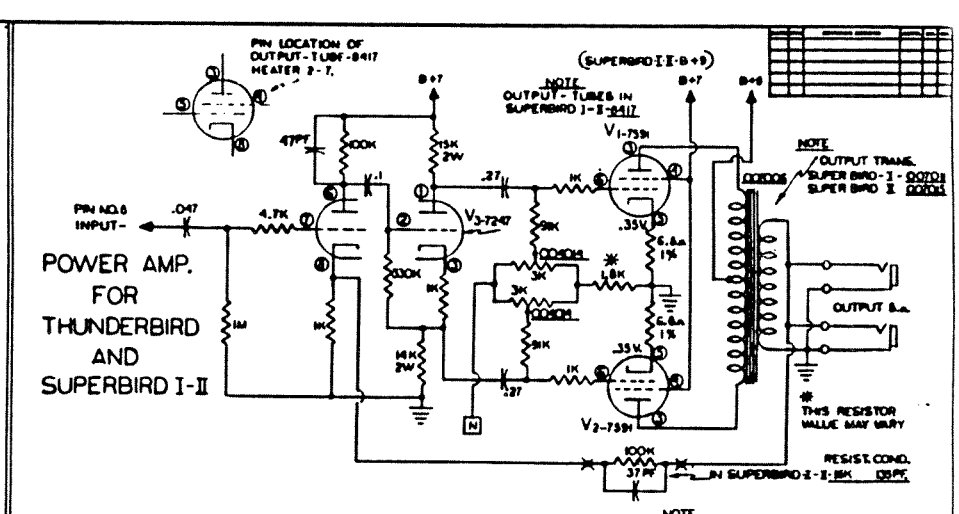

FIGURE 1

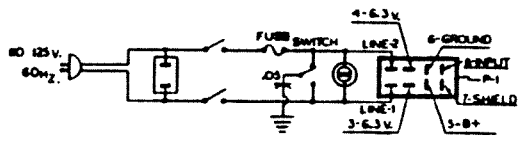

NOTE
ALL CAPACITORS IN MICROFARAD UNLESS OTHERWISE SPECIFIED.

ALL RESISTORS 1/2W 10% UNLESS OTHERWISE SPECIFIED.

ALL D.C. VOLTAGE MEASUREMENTS ARE WITH RESPECT TO GROUND AND ARE TAKEN AT 117V. LINE VOLTAGE WITH 8Ω LOAD CONNECTED TO OUTPUT AND NO SIGNAL APPLIED TO INPUT.

ADJUST EACH OUTPUT TUBE BIAS CONTROL TO PROVIDE .35V D.C. AT THE CATHODE OF THE ASSOCIATED TUBE.

THUNDERBIRD
POWER SUPPLY

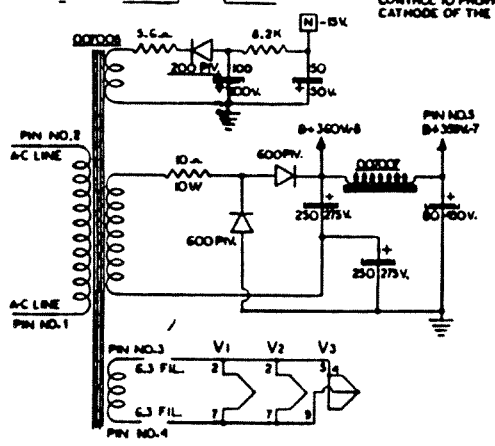

	POWER AMP.-SUPPLY-
	THUNDER — SUPERBIRD I-II
	2-2-68