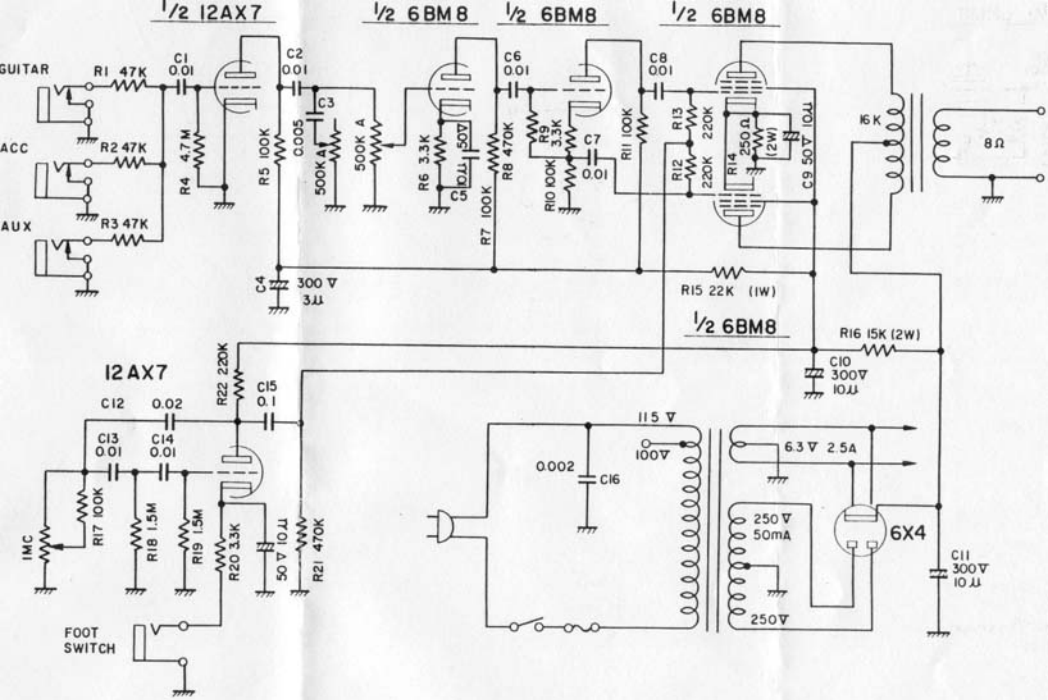

1/2 12AX7
1/2 6BM8
1/2 6BM8
1/2 6BM8
GUITAR
ACC
AUX
R1 47K
R2 47K
R3 47K
C1 0.01
C2 0.01
C3 0.005
R4 4.7M
R5 100K
500K A
500K A
R6 3.3K
C5 10µ 50V
R7 100K
R8 470K
C6 0.01
R9 3.3K
R10 100K
C7 0.01
R11 100K
C8 0.01
R12 220K
R13 220K
R14 250Ω (2W)
C9 50V 10µ
16K
8Ω
C4 300V 3µ
R15 22K (1W)
1/2 6BM8
R16 15K (2W)
C10 300V 10µ
12AX7
R22 220K
C15 0.1
C12 0.02
C13 0.01
C14 0.01
R17 100K
R18 1.5M
R19 1.5M
R20 3.3K
50V 10µ
R21 470K
1MC
FOOT SWITCH
115V
100V
0.002
C16
6.3V 2.5A
250V 50mA
250V
6X4
C11 300V 10µ

U - 45B 40 6 1