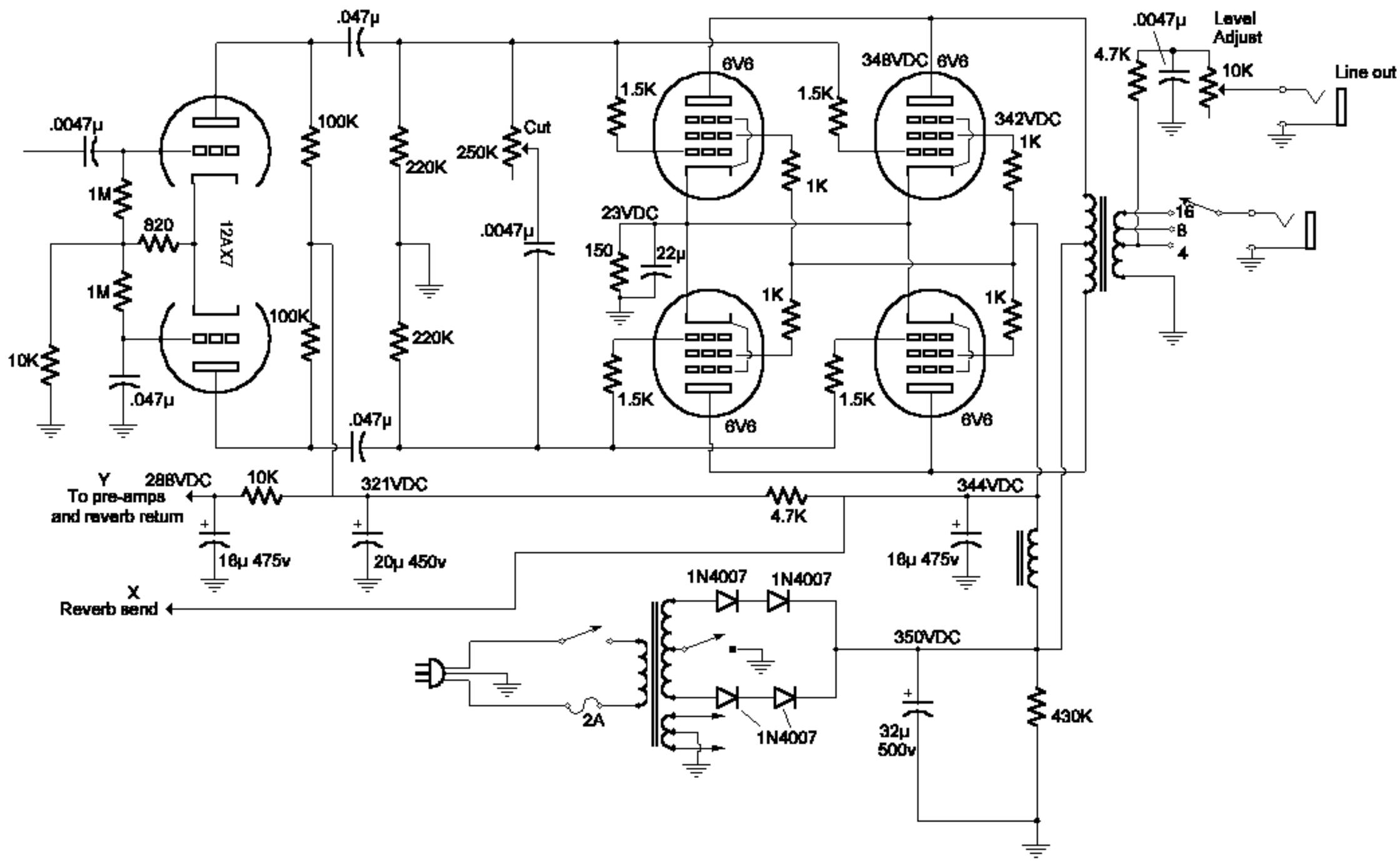
.047µ
.0047µ
Level Adjust
4.7K
10K
Line out
6V6
348VDC
342VDC
1.5K
1K
100K
220K
250K
Cut
.0047µ
23VDC
150
22µ
1M
820
12AX7
10K
.047µ
16
8
4
Y
288VDC
To pre-amps and reverb return
321VDC
344VDC
4.7K
18µ 475v
20µ 450v
X
Reverb send
1N4007
350VDC
2A
32µ 500v
430K